Complete MEM Curriculum Flowchart Including HSS & Free Electives

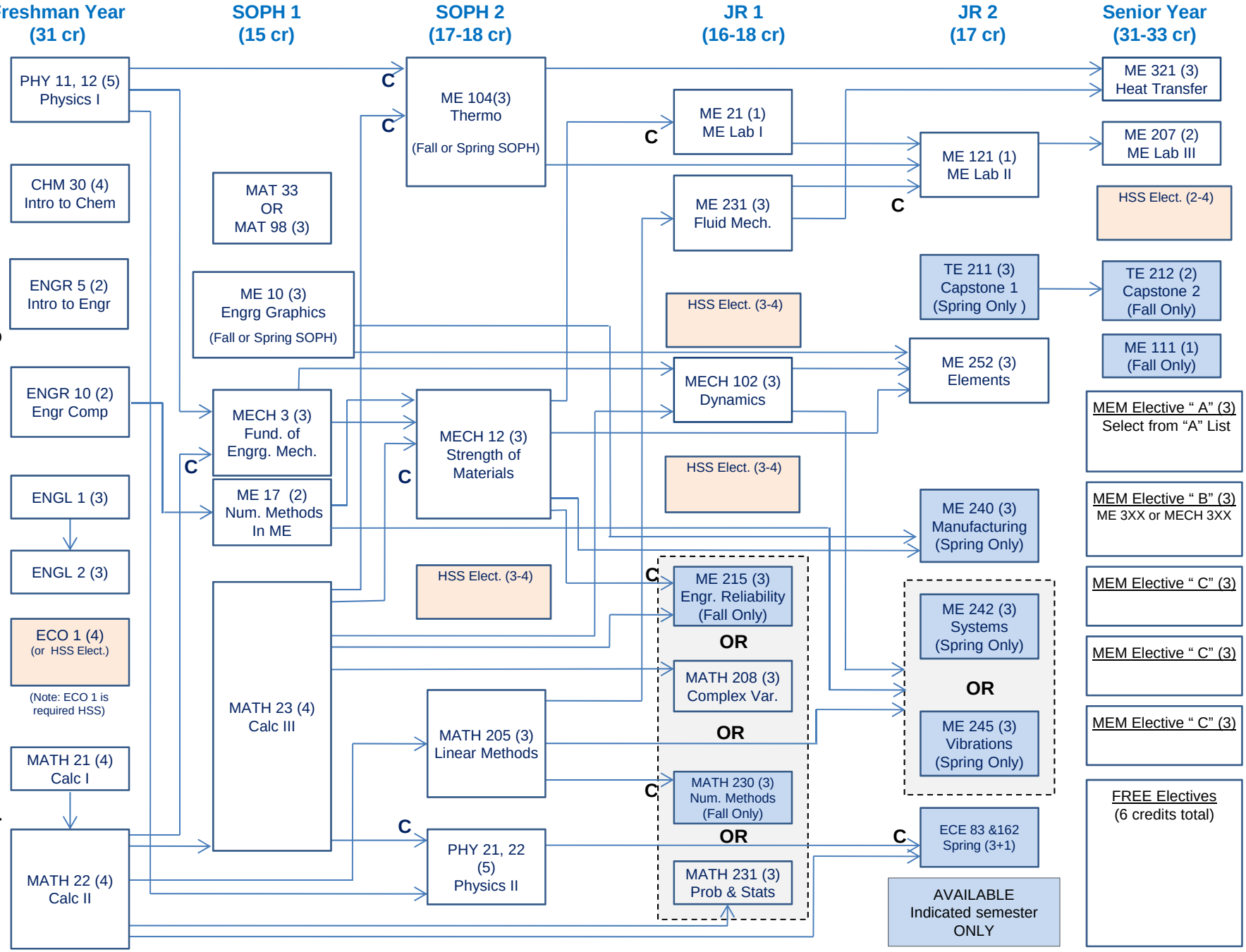

"C" = Co-Requisite. Courses can be taken concurrently

Total Credits Required: 129

Rev. 3-13-15